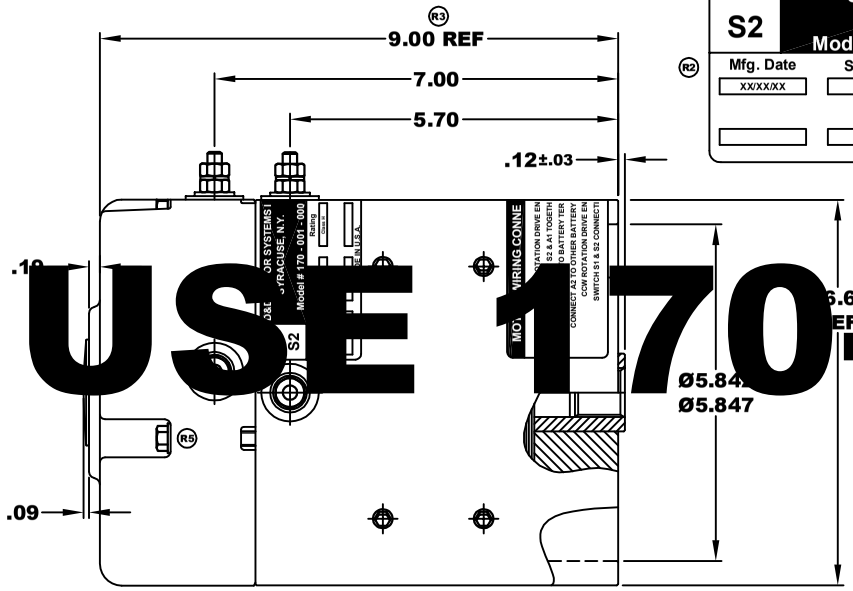

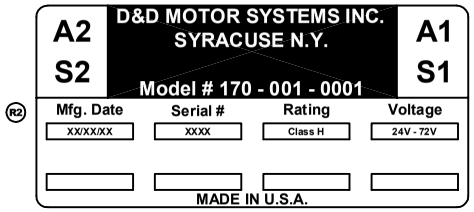

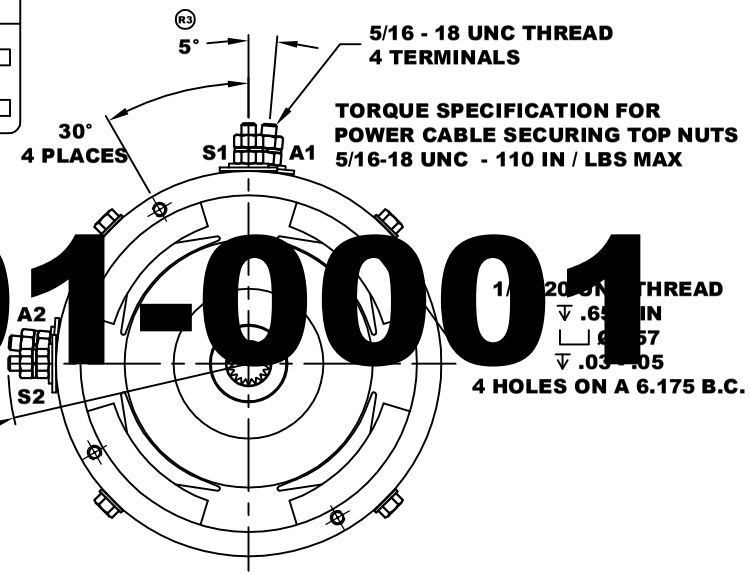

USE 170-001-0001

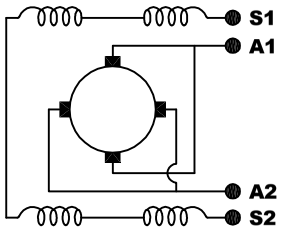

ELECTRICAL WIRING DIAGRAM

MOTOR WIRING CONNECTIONS:
CW ROTATION DRIVE END
CONNECT S2 & A1 TOGETHER
CONNECT S1 TO BATTERY TERMINAL
CONNECT A2 TO OTHER BATTERY TERMINAL
CCW ROTATION DRIVE END
SWITCH S1 & S2 CONNECTIONS

INTERNAL INVOLUTE SPLINE SPECIFICATION
CLASS 5 FILLET ROOT SIDE FIT (PER A.N.S.I. B92.1)

NO. OF TEETH	19
SPLINE PITCH	24 /48
PRESSURE ANGLE	45°
BASE Ø	.5597 REF
PITCH Ø	.7916 REF
MAJOR Ø	.850 - .859
FORM Ø	.835
MINOR Ø	.767 - .772
CIRCULAR SPACE WIDTH	.0764
EFFECTIVE SPACE WIDTH	.0738
MAX. DIMENSION BETWEEN TWO PINS	.6714
PIN Ø	.0800
SPLINE HARDNESS TO BE R/C 26-34	

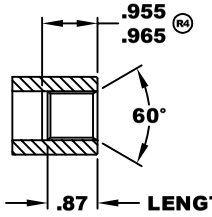

MOTOR WEIGHT 46 LBS
CLASS "H" INSULATION
PERFORMANCE SPEC: 1

THIS PRINT IS THE PROPERTY OF D&D MOTOR SYSTEMS INC.

DO NOT SCALE

WORK TO DIMENSIONS

TOLERANCES UNLESS OTHERWISE SPECIFIED ARE AS FOLLOWS

.XX	.01
.XXX	.005
.XX ROUGH CASTING	.03
HOLES	-.001 / +.006
ANGLES	0'30"

D & D MOTOR SYSTEMS INC

MOTOR OUTLINE

SIZE	DRAWN DATE	RELEASE DATE	DWG NO. / PART NO.	REV
B	12-17-01	12-21-01	170 - 001 - 0001	R5
SCALE STF	DRAWN BY MJG	ES-1	REV DATE 12-1-10	