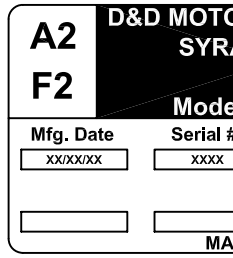

TORQUE SPECIFICATION FOR
POWER CABLE SECURING TOP NUTS
5/16-18 UNC (A1 / A2) - 110 IN / LBS MAX
1/4-20 UNC (F1 / F2) - 50 IN / LBS MAX

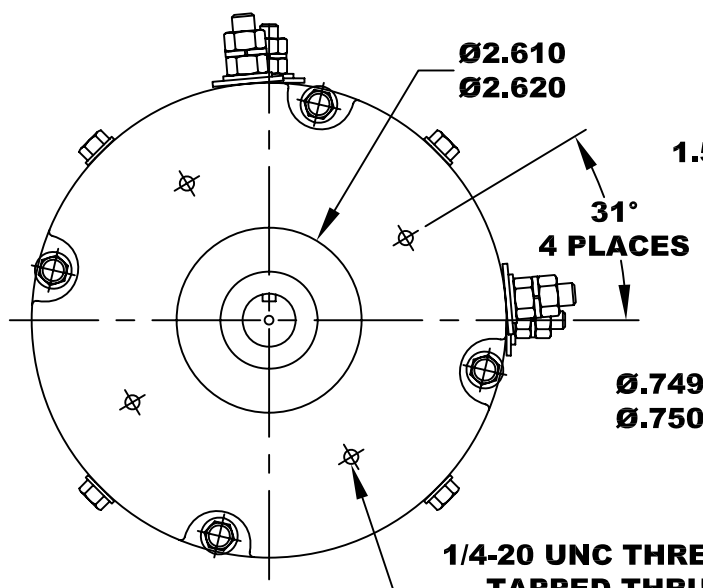

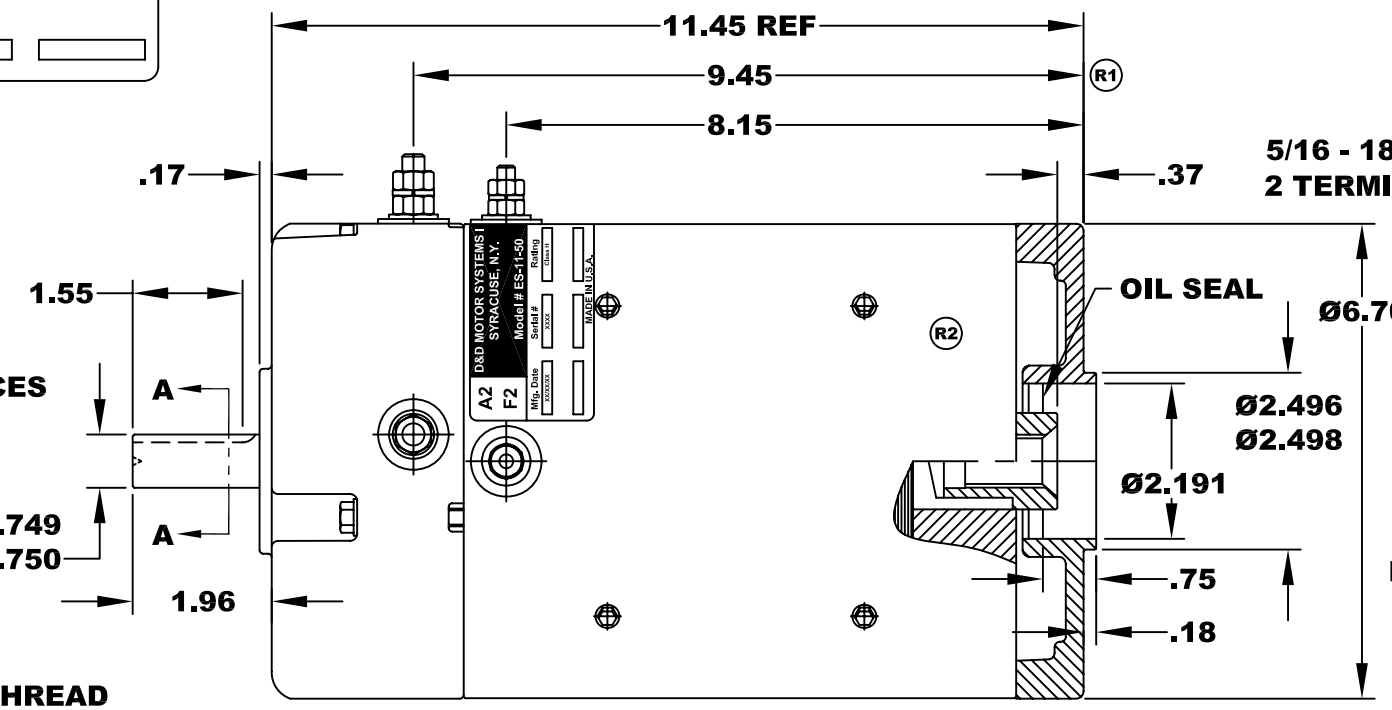

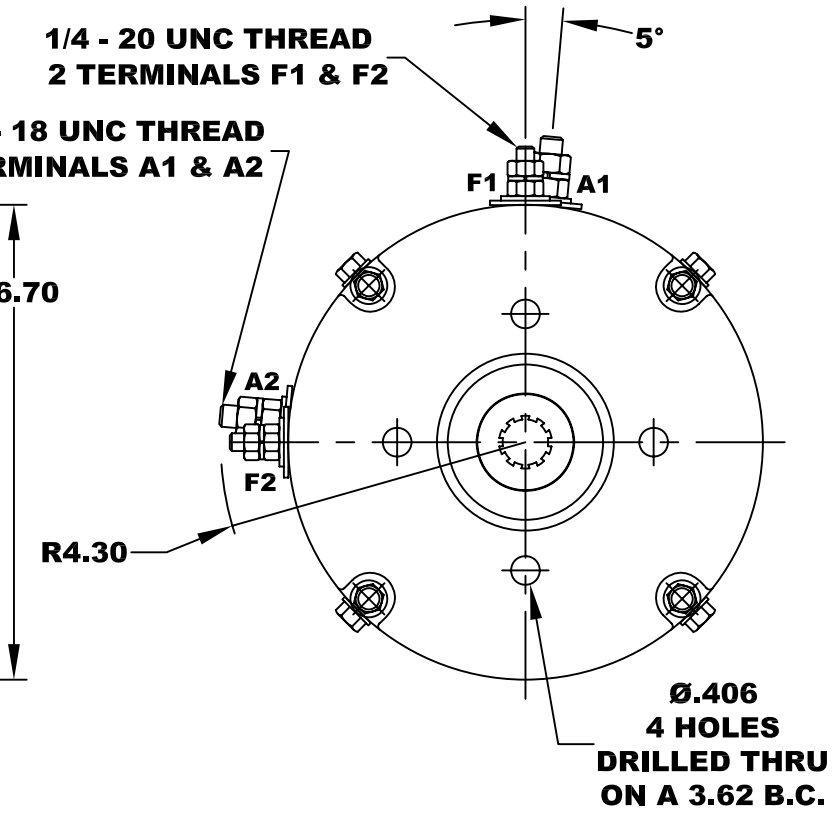

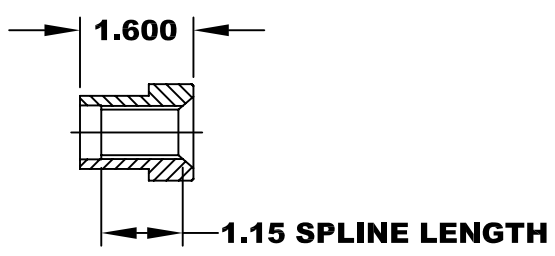

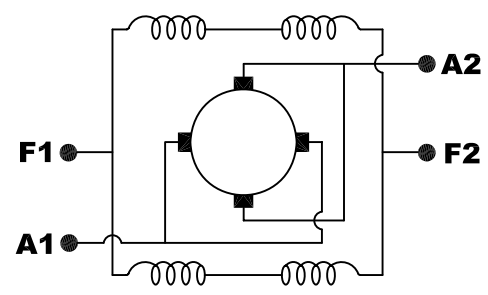

ELECTRICAL WIRING DIAGRAM

MOTOR WIRING CONNECTIONS:
CW ROTATION DRIVE END
CONNECT A1 & F1 TO ONE BATTERY TERMINAL
CONNECT A2 & F2 TO OTHER BATTERY TERMINAL
CCW ROTATION DRIVE END
SWITCH F1 & F2 CONNECTIONS

MOTOR WEIGHT: 57 LBS
CLASS "H" INSULATION
PERFORMANCE SPEC: 50

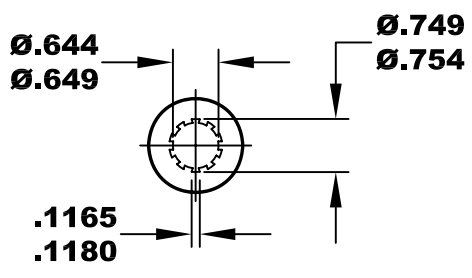

10 TOOTH
INTERNAL SPLINE
HARDNESS OF SPLINE
TO BE R/C 46 - 53 (.02 DEPTH MIN)

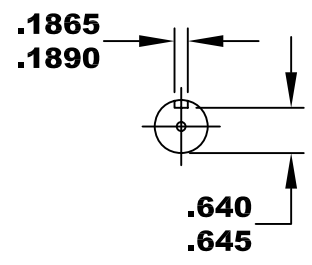

SECTION A-A

THIS PRINT IS THE PROPERTY OF D&D MOTOR SYSTEMS INC.

DO NOT SCALE

WORK TO DIMENSIONS

TOLERANCES UNLESS OTHERWISE SPECIFIED ARE AS FOLLOWS

.XX	.01
.XXX	.005
.XX ROUGH CASTING	.03
HOLES	-.001 / +.006
ANGLES	0'30"

D & D MOTOR SYSTEMS INC

MOTOR OUTLINE

SIZE	DRAWN DATE	RELEASE DATE	DWG NO. / PART NO.	REV
B	11-15-06		ES-11-50	R2
SCALE STF	DRAWN BY MJG			REV DATE 5-1-13