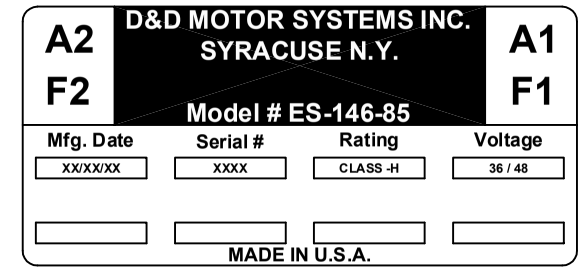

TORQUE SPECIFICATION FOR
POWER CABLE SECURING TOP NUTS
5/16-18 UNC (A1 / A2) - 110 IN / LBS MAX
1/4-20 UNC (F1 / F2) - 50 IN / LBS MAX

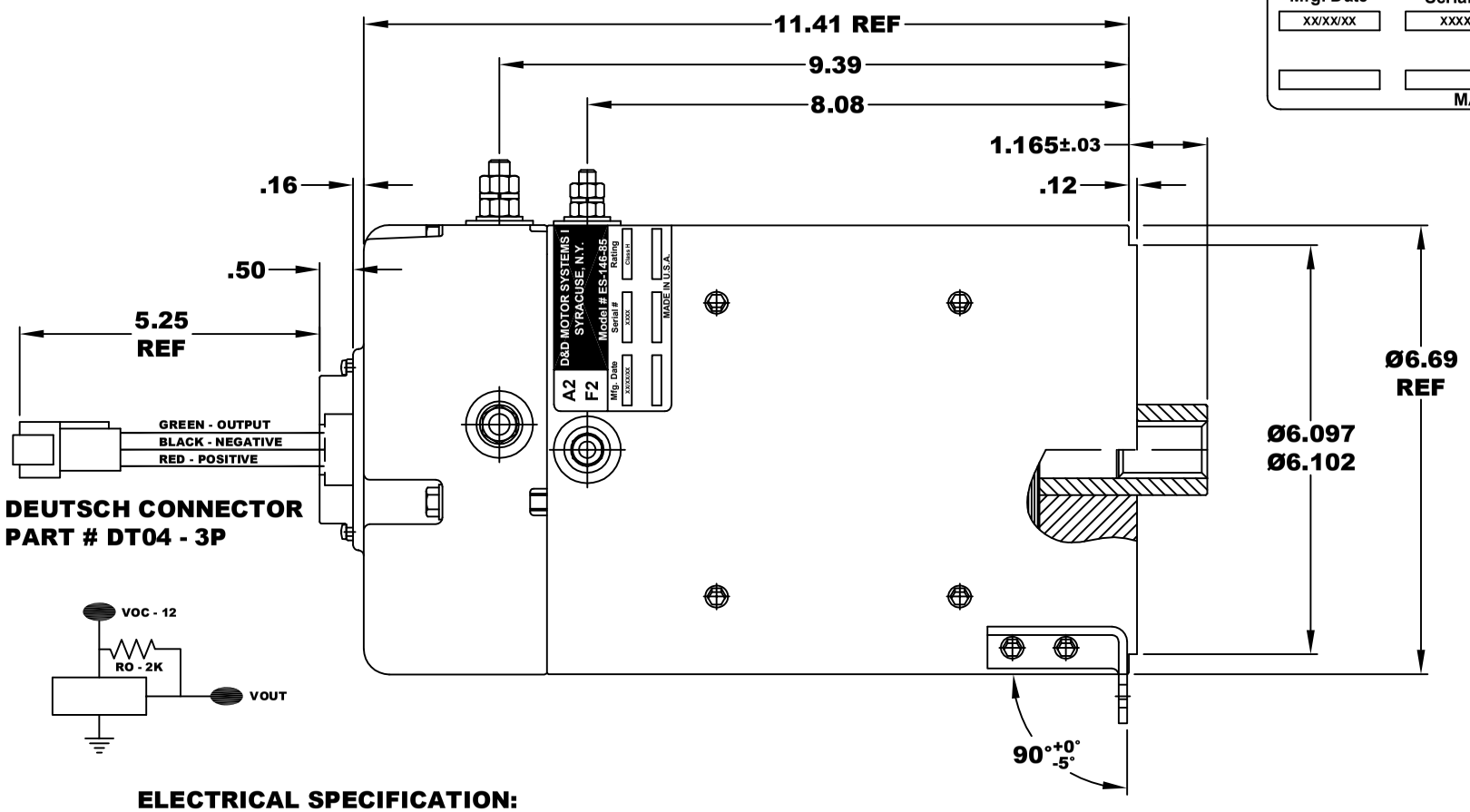

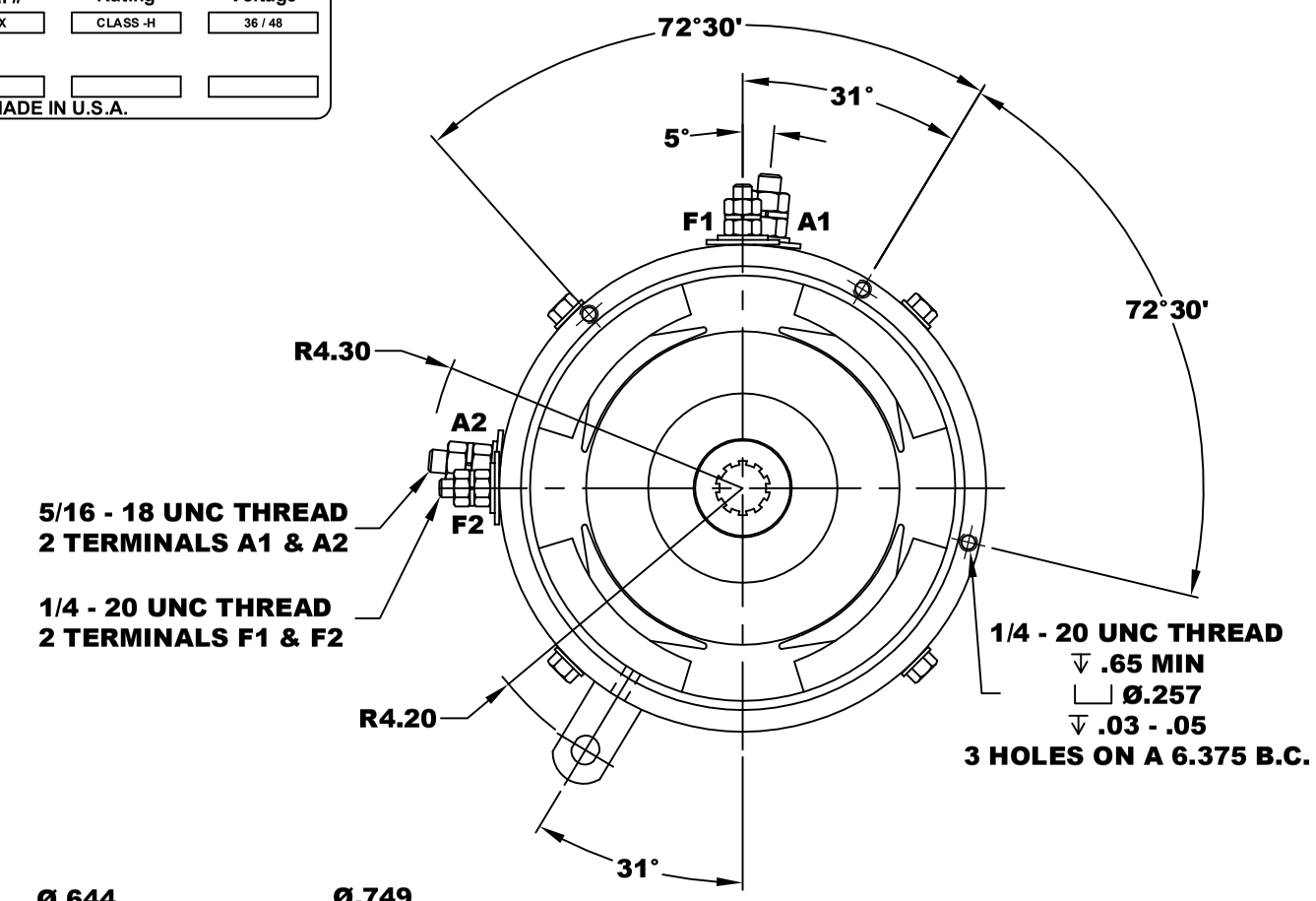

ELECTRICAL SPECIFICATION:
-4.5V TO 24V OPERATING VOLTAGE
-20°C TO 85°C OPERATING TEMPERATURE
-CURRENT SINKING UP TO 25mA
-AN EXTERNAL OUTPUT PULL UP RESISTOR IS REQUIRED
-SENSOR IS DESIGNED TO OPERATE WITH 4 N/S POLEPAIRS
THE OPERATIONAL DISTANCE BETWEEN THE MAGNET
AND THE HOUSING, INCLUDING ANY RUNOUT
SHOULD NOT EXCEED .030 INCHES

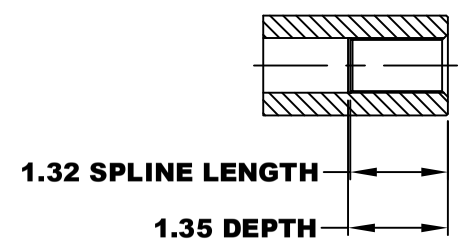

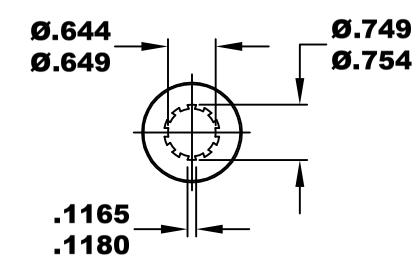

10 TOOTH
INTERNAL SPLINE

MOTOR WEIGHT 66 LBS
CLASS "H" INSULATION
PERFORMANCE SPEC: 85

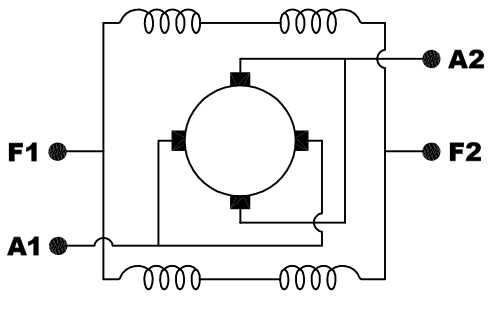

ELECTRICAL WIRING DIAGRAM

MOTOR WIRING CONNECTIONS:
CW ROTATION DRIVE END
CONNECT A1 & F1 TO ONE BATTERY TERMINAL
CONNECT A2 & F2 TO OTHER BATTERY TERMINAL
CCW ROTATION DRIVE END
SWITCH F1 & F2 CONNECTIONS

THIS PRINT IS THE PROPERTY OF D&D MOTOR SYSTEMS INC.

DO NOT SCALE
WORK TO DIMENSIONS
TOLERANCES UNLESS OTHERWISE SPECIFIED ARE AS FOLLOWS

.XX	.01
.XXX	.005
.XX ROUGH CASTING	.03
HOLES	-.001 / +.006
ANGLES	0'30"

D & D MOTOR SYSTEMS INC

MOTOR OUTLINE

SIZE	DRAWN DATE	RELEASE DATE	DWG NO. / PART NO.	REV
B	12-10-20		ES-146-85	
SCALE STF	DRAWN BY MJG		REV DATE	