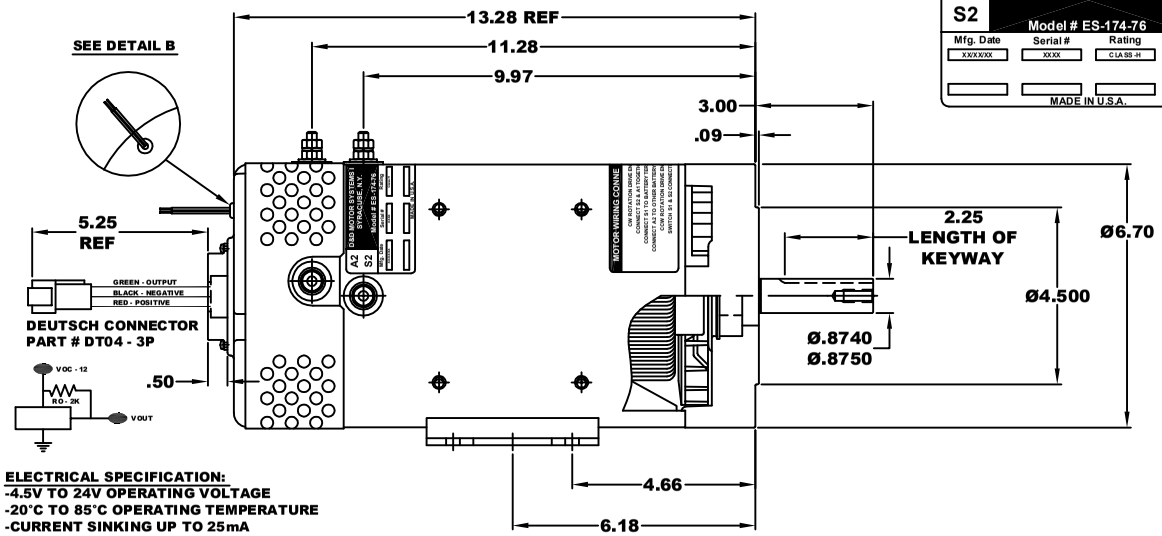

TORQUE SPECIFICATION FOR POWER CABLE SECURING TOP NUTS 5/16-18 UNC - 110 IN / LBS MAX

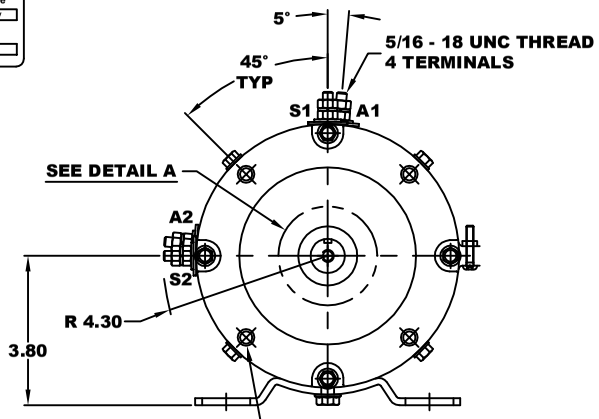

ELECTRICAL SPECIFICATION:
- -4.5V TO 24V OPERATING VOLTAGE
- -20°C TO 85°C OPERATING TEMPERATURE
- -CURRENT SINKING UP TO 25mA
- -AN EXTERNAL OUTPUT PULL UP RESISTOR IS REQUIRED
- -SENSOR IS DESIGNED TO OPERATE WITH 2 N/S POLEPAIRS

THE OPERATIONAL DISTANCE BETWEEN THE MAGNET AND THE HOUSING, INCLUDING ANY RUNOUT SHOULD NOT EXCEED .030 INCHES

DETAIL A

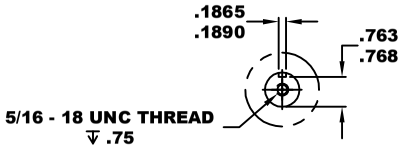

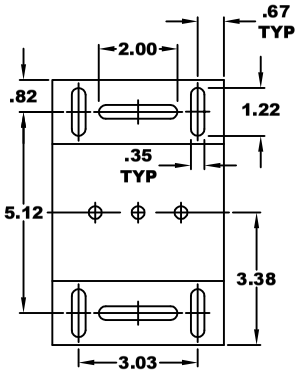

DETAIL B

THERMAL PROTECTOR ELECTRICAL SPECIFICATION: MAX. DC OPERATING VOLTAGE: 60 VOLTS140° C NORMALLY OPEN SWITCH

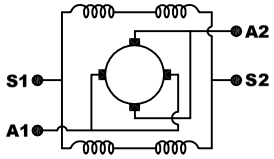

ELECTRICAL WIRING DIAGRAM

MOTOR WIRING CONNECTIONS:
- CW ROTATION DRIVE END
- CONNECT S2 & A1 TOGETHER
- CONNECT S1 TO BATTERY TERMINAL
- CONNECT A2 TO OTHER BATTERY TERMINAL
- CCW ROTATION DRIVE END
- SWITCH S1 & S2 CONNECTIONS

MOTOR WEIGHT: XX LBS
CLASS "H" INSULATION
PERFORMANCE SPEC: 76

THIS PRINT IS THE PROPERTY OF D&D MOTOR SYSTEMS INC.

DO NOT SCALE

WORK TO DIMENSIONS

TOLERANCES UNLESS OTHERWISE SPECIFIED ARE AS FOLLOWS

.XX	.01
.XXX	.005
.XX ROUGH CASTING	.03
HOLES	-.001 / +.006
ANGLES	0°30"

D & D MOTOR SYSTEMS INC

MOTOR OUTLINE

SIZE	DRAWN DATE	RELEASE DATE	DWG NO. / PART NO.	REV
B	6-24-24		ES-174-76	
SCALE	STF	DRAWN BY	MJG	REV DATE