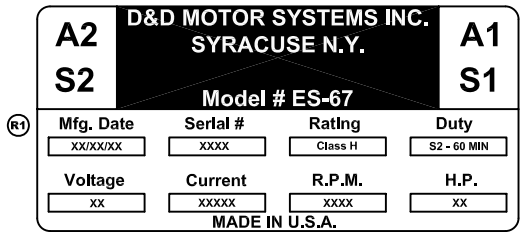

TORQUE SPECIFICATION FOR POWER CABLE SECURING TOP NUTS 3/8-16 UNC - 140 IN / LBS MAX

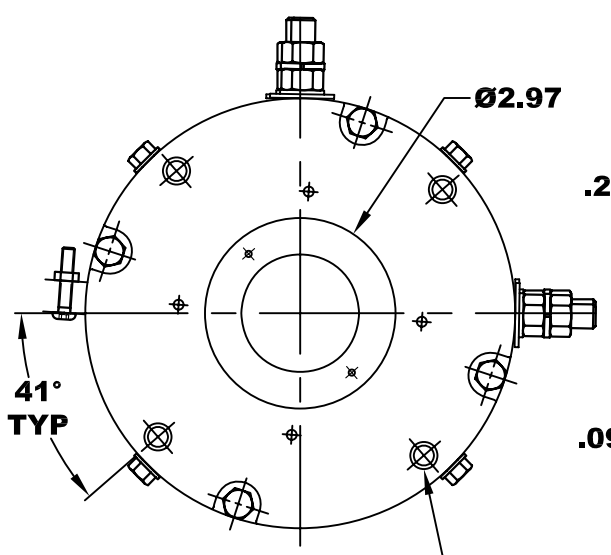

Ø 3/8 - 16 UNC THREAD
TAPPED THRU
.03 -.05 x 45° CHAMFER
4 PLACES, ON A Ø5.875 B. C.

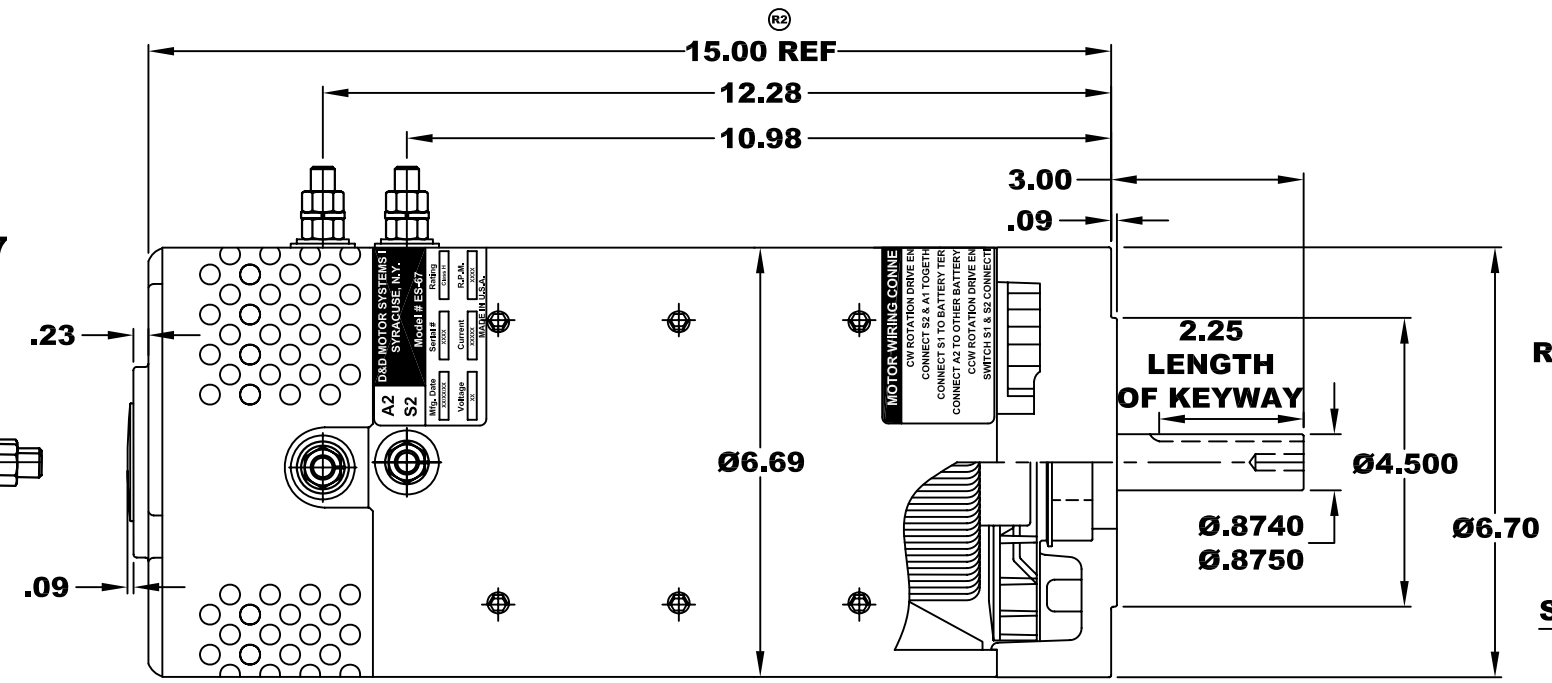

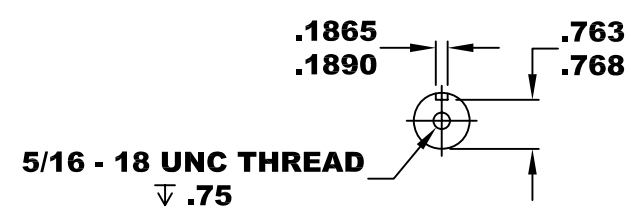

DETAIL A

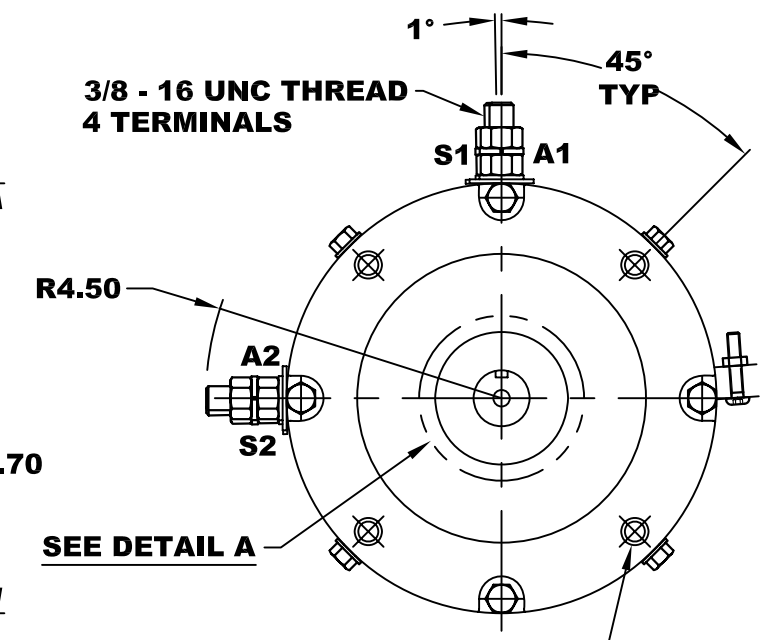

Ø 3/8 - 16 UNC THREAD
↧ .65 MINIMUM
BREAK THRU PERMISSABLE
.03 -.05 x 45° CHAMFER
4 PLACES, ON A Ø5.875 B. C.

MOTOR WEIGHT: 83 LBS
CLASS "H" INSULATION
PERFORMANCE SPEC: 29

R3 REVISE VIEW

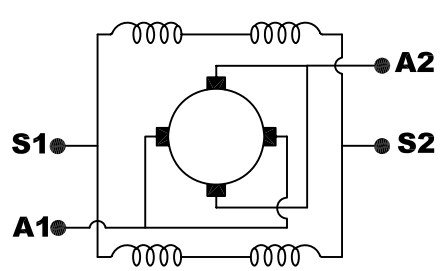

ELECTRICAL WIRING DIAGRAM

MOTOR WIRING CONNECTIONS:
CW ROTATION DRIVE END
CONNECT S2 & A1 TOGETHER
CONNECT S1 TO BATTERY TERMINAL
CONNECT A2 TO OTHER BATTERY TERMINAL
CCW ROTATION DRIVE END
SWITCH S1 & S2 CONNECTIONS

THIS PRINT IS THE PROPERTY OF D&D MOTOR SYSTEMS INC.

DO NOT SCALE
WORK TO DIMENSIONS
TOLERANCES UNLESS OTHERWISE SPECIFIED ARE AS FOLLOWS

.XX	.01
.XXX	.005
.XX ROUGH CASTING	.03
HOLES	-.001 / +.006
ANGLES	0'30"

D & D MOTOR SYSTEMS INC

MOTOR OUTLINE

SIZE	DRAWN DATE	RELEASE DATE	DWG NO. / PART NO.	REV
B	3-7-03		ES-67	R3
SCALE STF	DRAWN BY MJG			REV DATE 8-5-04