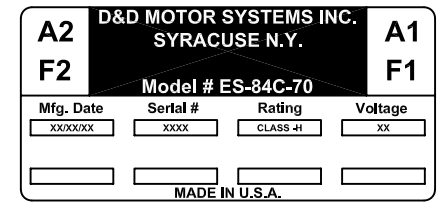

TORQUE SPECIFICATION FOR
POWER CABLE SECURING TOP NUTS
3/8-16 UNC (A1 & A2) - 140 IN / LBS MAX
1/4-20 UNC (F1 & F2) - 50 IN / LBS MAX

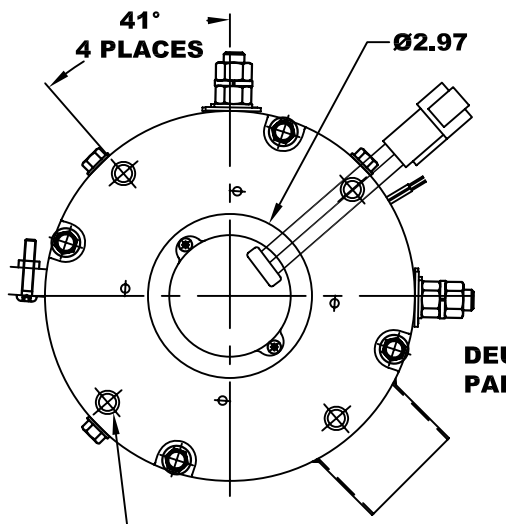

Ø 3/8 - 16 UNC THREAD
TAPPED THRU
.03 -.05 x 45° CHAMFER
4 PLACES, ON A Ø5.875 B. C.

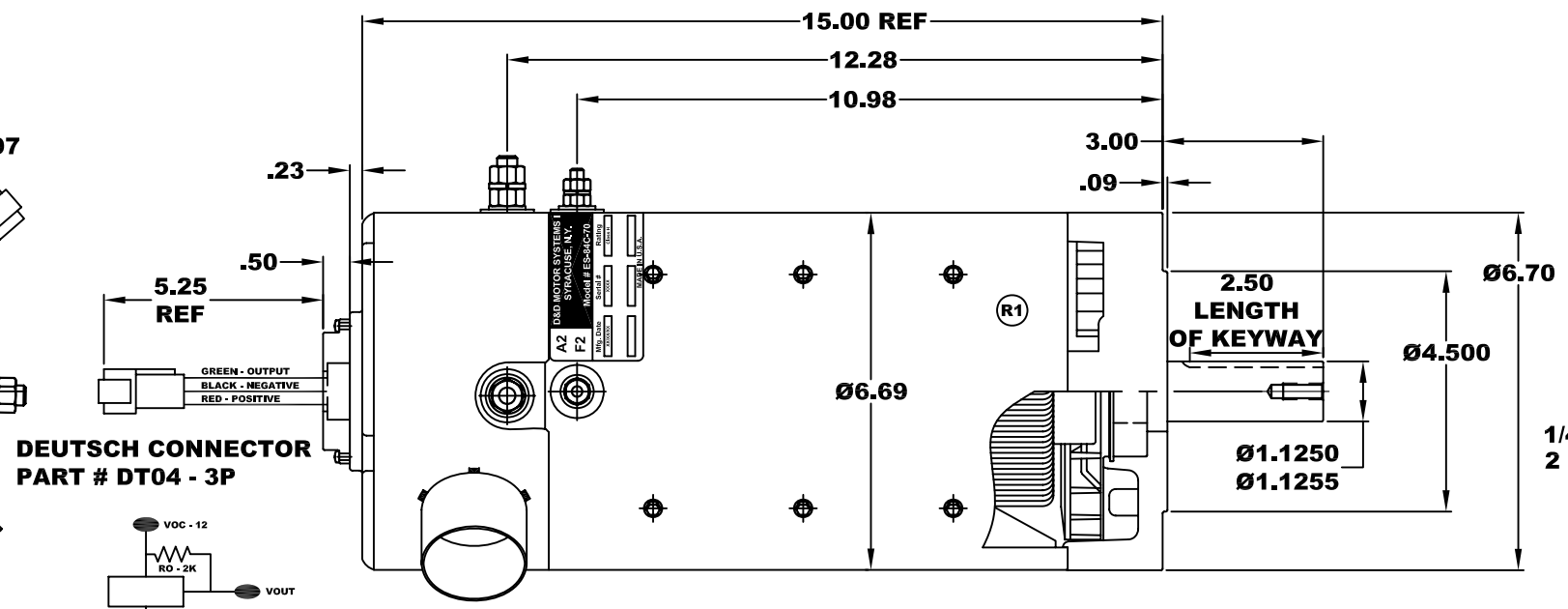

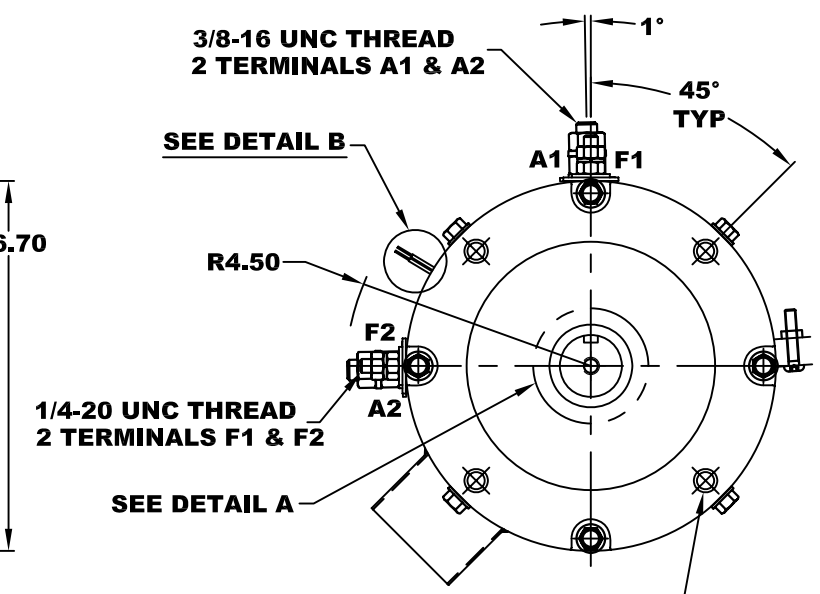

Ø 3/8 - 16 UNC THREAD
↧ .65 MINIMUM
BREAK THRU PERMISSABLE
.03 -.05 x 45° CHAMFER
4 PLACES, ON A Ø5.875 B. C.

SPEED SENSOR ELECTRICAL SPECIFICATION:
-4.5V TO 24V OPERATING VOLTAGE
-20°C TO 85°C OPERATING TEMPERATURE
-CURRENT SINKING UP TO 25mA
-AN EXTERNAL OUTPUT PULL UP RESISTOR IS REQUIRED
-SENSOR IS DESIGNED TO OPERATE WITH 4 N/S POLEPAIRS
THE OPERATIONAL DISTANCE BETWEEN THE MAGNET
AND THE HOUSING, INCLUDING ANY RUNOUT
SHOULD NOT EXCEED .030 INCHES

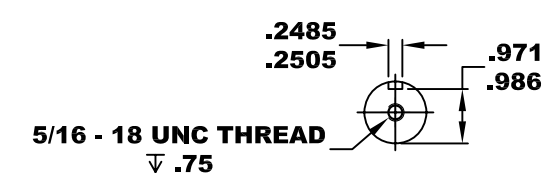

DETAIL A

THERMAL PROTECTOR ELECTRICAL SPECIFICATION:
MAX. DC OPERATING VOLTAGE: 60 VOLTS
120° C NORMALLY OPEN SWITCH

DETAIL B

MOTOR WEIGHT: 83 LBS
CLASS "H" INSULATION
PERFORMANCE SPEC: 70

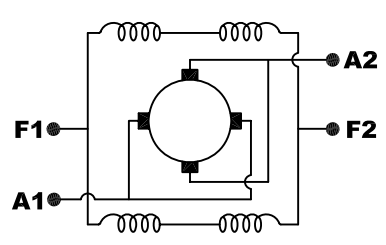

ELECTRICAL WIRING DIAGRAM

MOTOR WIRING CONNECTIONS:
CW ROTATION DRIVE END
CONNECT A1 & F1 TO ONE BATTERY TERMINAL
CONNECT A2 & F2 TO OTHER BATTERY TERMINAL
CCW ROTATION DRIVE END
SWITCH F1 & F2 CONNECTIONS

THIS PRINT IS THE PROPERTY OF D&D MOTOR SYSTEMS INC.

DO NOT SCALE
WORK TO DIMENSIONS
TOLERANCES UNLESS OTHERWISE SPECIFIED ARE AS FOLLOWS

.XX	.01
.XXX	.005
.XX ROUGH CASTING	.03
HOLES	-.001 / +.006
ANGLES	0'30"

D & D MOTOR SYSTEMS INC

MOTOR OUTLINE

SIZE	DRAWN DATE	RELEASE DATE	DWG NO. / PART NO.	REV
B	5-28-10		ES-84C-70	R1
SCALE STF	DRAWN BY MJG		REV DATE 6-16-10	