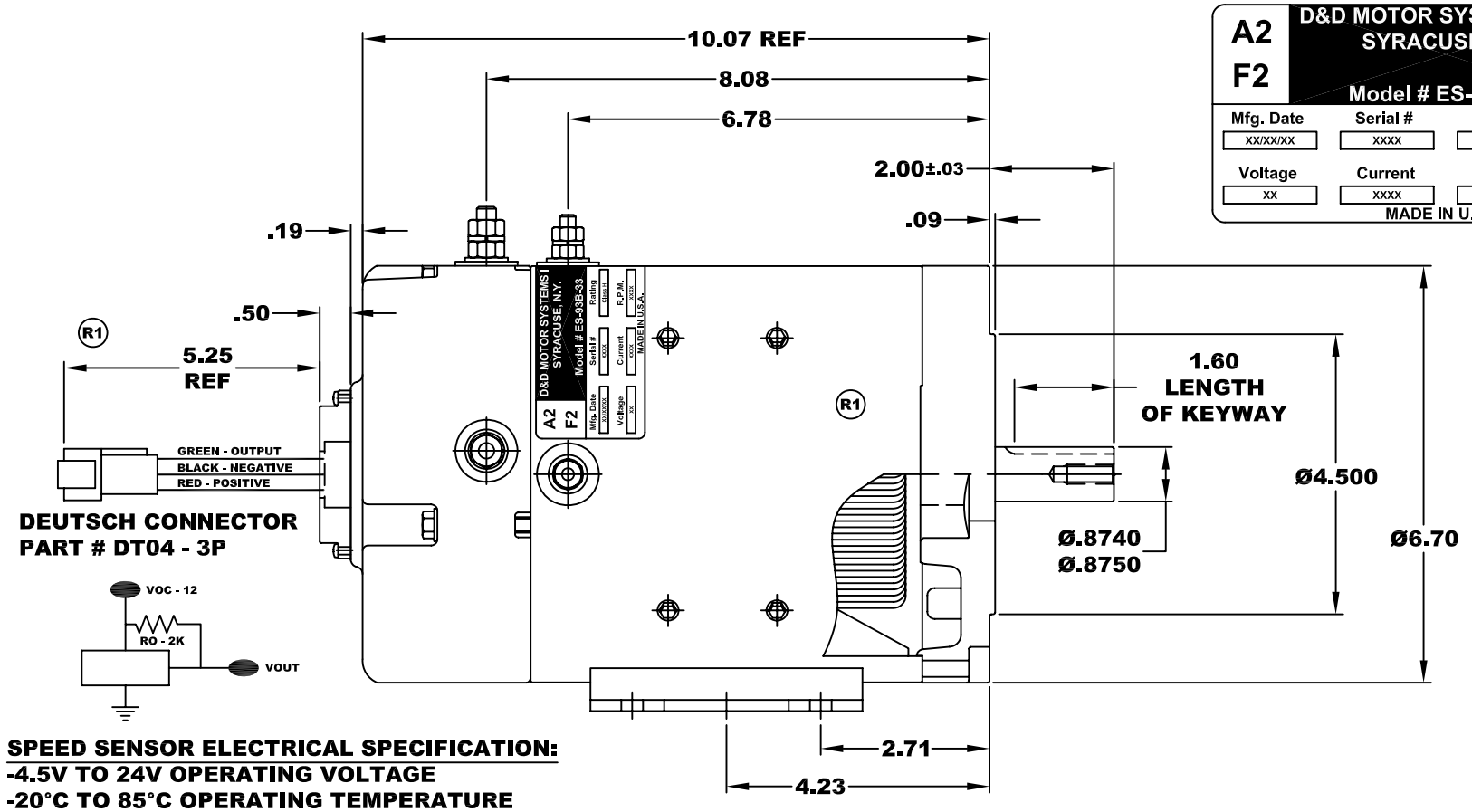

A2 F2	D&D MOTOR SYSTEMS INC. SYRACUSE N.Y. Model # ES-93B-33		A1 F1
Mfg. Date	Serial #	Rating	Duty
XX/XX/XX	XXXX	CLASS -H	S2-XX MIN
Voltage	Current	R.P.M.	H.P.
XX	XXXX	XXXX	XX
MADE IN U.S.A.			

TORQUE SPECIFICATION FOR
POWER CABLE SECURING TOP NUTS
5/16-18 UNC (A1 / A2) - 110 IN / LBS MAX
1/4-20 UNC (F1 / F2) - 50 IN / LBS MAX

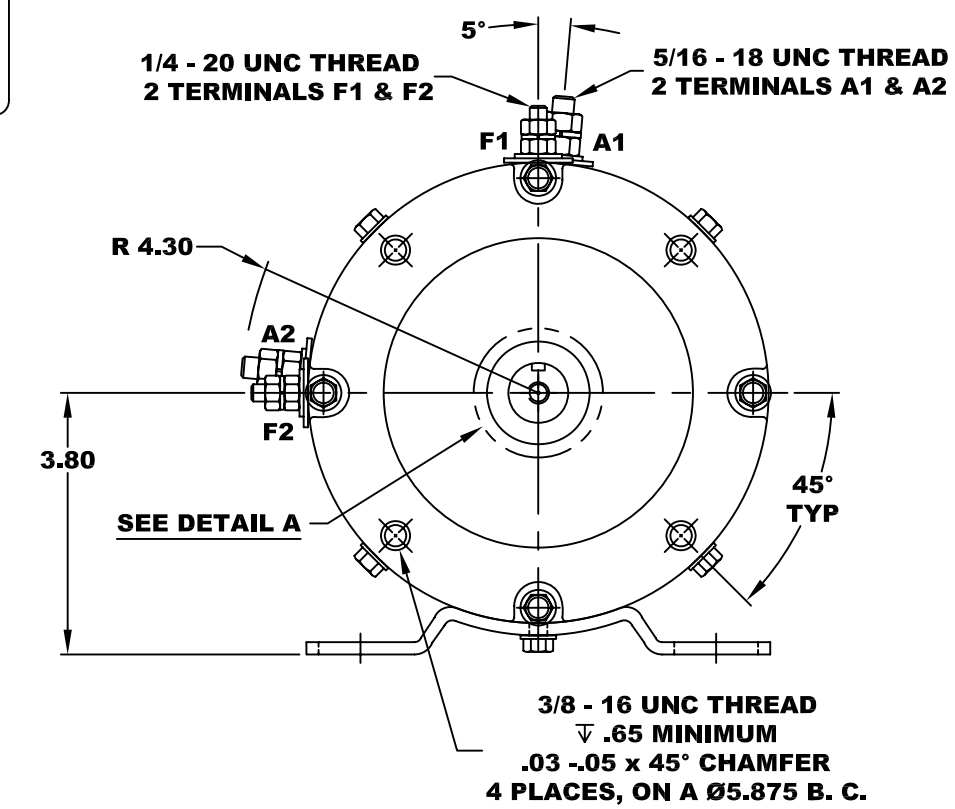

SPEED SENSOR ELECTRICAL SPECIFICATION:
-4.5V TO 24V OPERATING VOLTAGE
-20°C TO 85°C OPERATING TEMPERATURE
-CURRENT SINKING UP TO 25mA
-AN EXTERNAL OUTPUT PULL UP RESISTOR IS REQUIRED
-SENSOR IS DESIGNED TO OPERATE WITH 4 N/S POLEPAIRS
THE OPERATIONAL DISTANCE BETWEEN THE MAGNET
AND THE HOUSING, INCLUDING ANY RUNOUT
SHOULD NOT EXCEED .030 INCHES

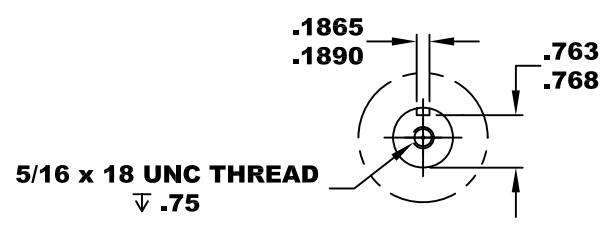

DETAIL A

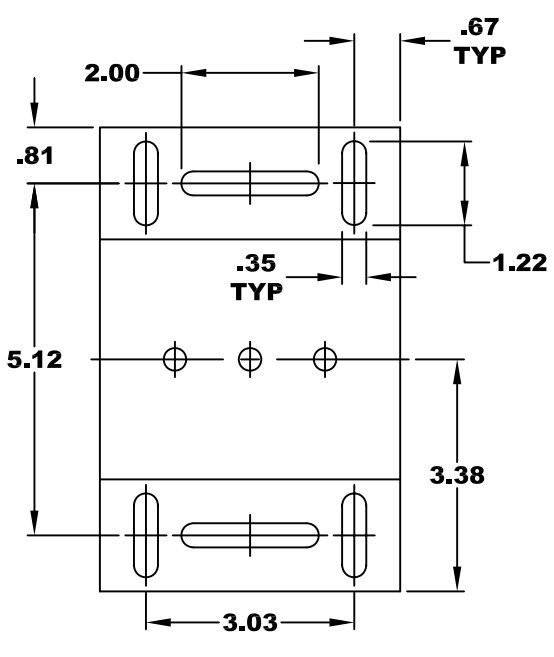

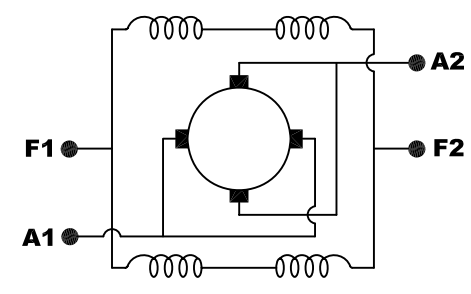

ELECTRICAL WIRING DIAGRAM

MOTOR WIRING CONNECTIONS:
CW ROTATION DRIVE END
CONNECT A1 & F1 TO ONE BATTERY TERMINAL
CONNECT A2 & F2 TO OTHER BATTERY TERMINAL
CCW ROTATION DRIVE END
SWITCH F1 & F2 CONNECTIONS

MOTOR WEIGHT: 51 LBS
CLASS "H" INSULATION
PERFORMANCE SPEC: 33

THIS PRINT IS THE PROPERTY OF D&D MOTOR SYSTEMS INC.

DO NOT SCALE
WORK TO DIMENSIONS
TOLERANCES UNLESS OTHERWISE SPECIFIED ARE AS FOLLOWS

.XX	.01
.XXX	.005
.XX ROUGH CASTING	.03
HOLES	-.001 / +.006
ANGLES	0'30"

D & D MOTOR SYSTEMS INC

MOTOR OUTLINE

SIZE	DRAWN DATE	RELEASE DATE	DWG NO. / PART NO.	REV
B	12-6-04		ES-93B-33	R1
SCALE STF	DRAWN BY MJG		REV DATE 1-23-13	